MILLWORK 360

THE DEGREE OF SUPERIOR QUALITY

IMPACT 360 SERIES

WOOD GLAZED OR OPAQUE SINGLE DOOR w/ SIDELITE(S)

INSWING/OUTSWING "IMPACT"

GENERAL NOTES

1. This product has been evaluated and is in compliance with the 5th Edition (2014) Florida Building Code (FBC) structural requirements excluding the "High Velocity Hurricane Zone" (HVHZ).
2. Product anchors shall be as listed and spaced as shown on details. Anchor embedment to base material shall be beyond wall dressing or stucco.
3. When used in areas requiring wind borne debris protection, this product complies with Section 1609.1.2 of the FBC and does not require an impact resistant covering. This product meets missile level "D" and includes Wind Zone 4 as defined in ASTM E 1996 and Section 1609.1.2.2 of the FBC.
4. For 2x stud framing construction, anchoring of these units shall be the same as that shown for 2x buck masonry construction.
5. Site conditions that deviate from the details of this drawing require further engineering analysis by a licensed engineer or registered architect.

TABLE OF CONTENTS

SHEET#	DESCRIPTION
1	Typical Elevations, Design Pressures & General Notes
2	Door Panel Details
3	Sidelite Panel Details
4	Elevations
5	Horizontal & Vertical Cross Sections (2X Buck)
6	Horizontal & Vertical Cross Sections (1X Buck)
7	Horizontal Cross Sections
8	Vertical Cross Sections (Thresholds)
9	Buck & Frame Anchoring (OX)
10	Buck & Frame Anchoring (OXO)
11	Hardware Details
12	Bill of Materials & Components

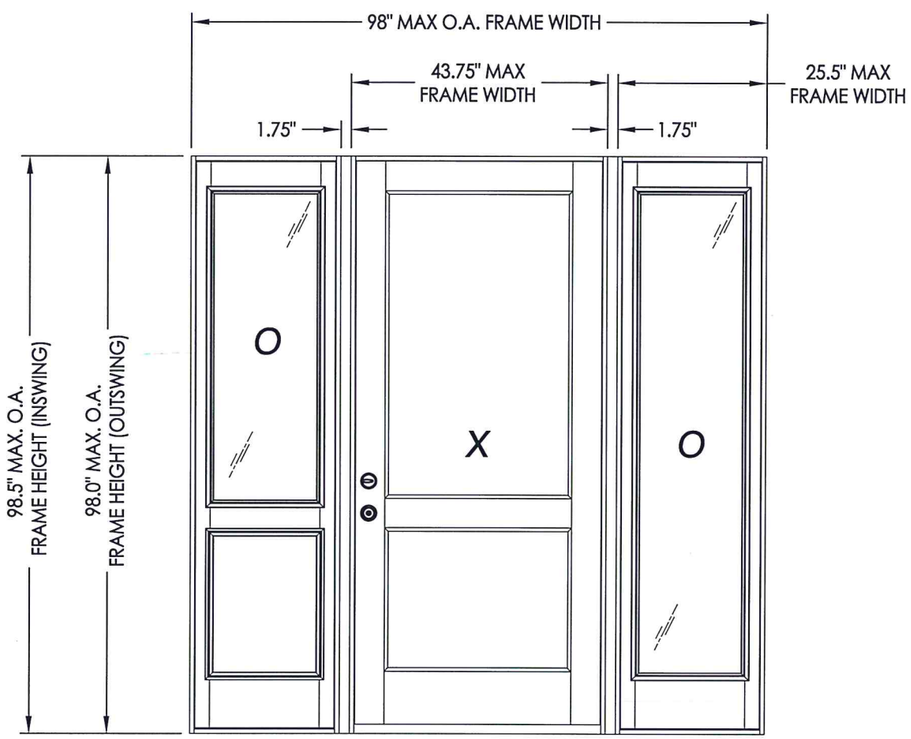

CONFIGURATION	DESIGN PRESSURE (PSF) INSWING		DESIGN PRESSURE (PSF) OUTSWING	
	POSITIVE	NEGATIVE	POSITIVE	NEGATIVE
OX, XO, OXO	+50.0	-50.0	+50.0	-50.0

L. F. SCHMIDT LICENSE No. 43409 STATE OF FLORIDA PROFESSIONAL ENGINEER

4-11-17

Documents Prepared By:
Lyndon F. Schmidt
P.E. No. 43409

RW BUILDING CONSULTANTS, INC.
P.O. Box 230, Valrico, FL 33595
Phone No.: 813.659.9197
FBPE C.A. No. 9813

PRODUCT: MILLWORK 360 WOOD DOOR

PART OR ASSEMBLY: TYPICAL ELEVATION, DESIGN PRESSURES & GENERAL NOTES

NO.	DATE	BY	REVISIONS

DATE: 02/14/17
SCALE: N.T.S.
DWG. BY: JK
CHK. BY: LFS
DRAWING NO.: FL-21891.2
SHEET 1 OF 12

© 2017 R.W. BUILDING CONSULTANTS INC.

R:\Clients\Millwork 360\A - Florida Product Approvals\FL-21891 Wood Doors\C - Drawings\FL-21891 (2014)\FL-21891.1-3.dwg, FL-21891.2

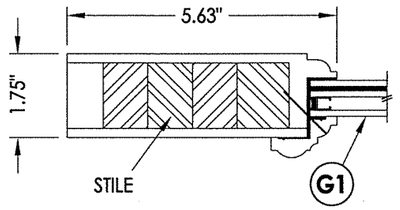

EXTERIOR

INTERIOR

1/2 HORIZONTAL CROSS SECTION

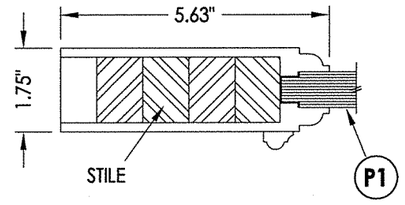

2/2 HORIZONTAL CROSS SECTION

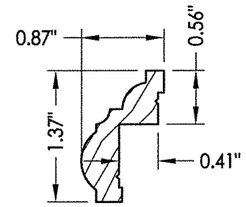

GLAZING BEAD

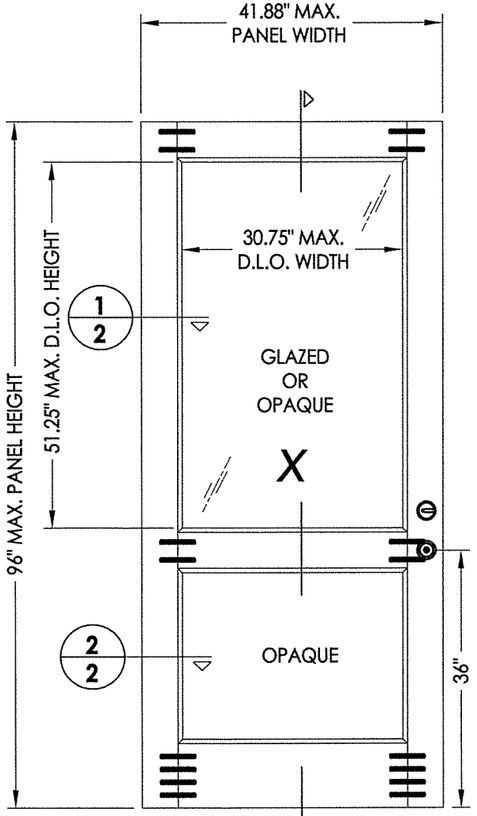

3/4 PANEL/LITE

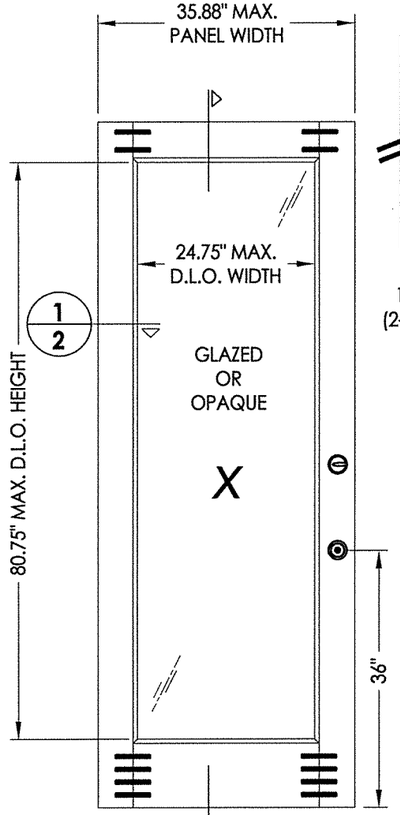

FULL PANEL/LITE

40 WOOD DOOR PANEL
Glazed or Opaque

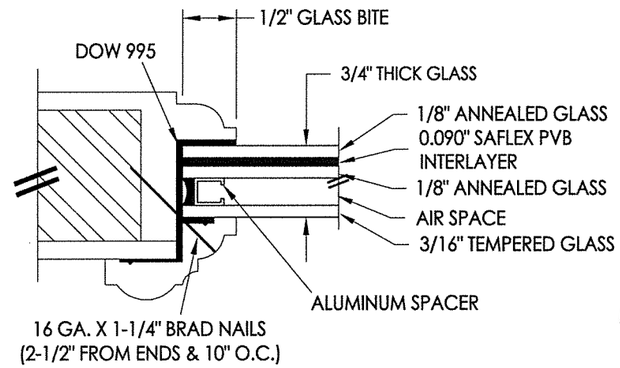

G1 GLAZING DETAIL

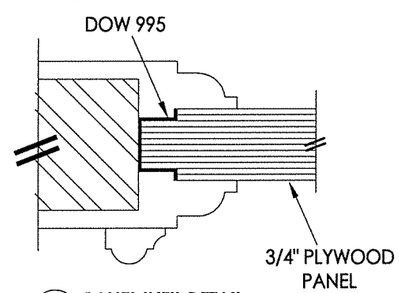

P1 PANEL INFIL DETAIL

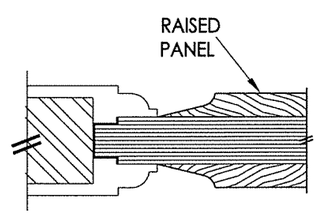

RAISED PANEL OPTION

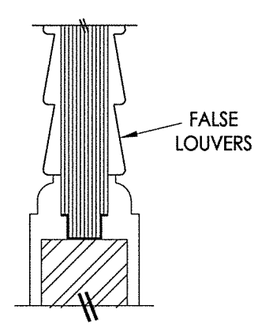

FALSE LOUVER OPTION

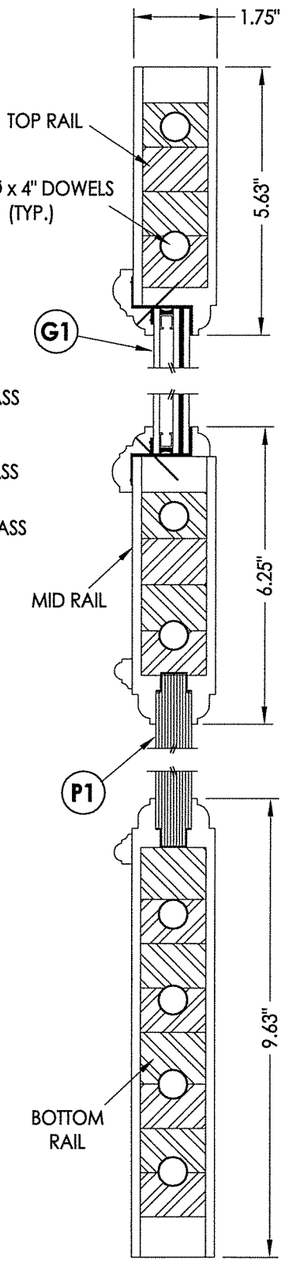

3/2 VERTICAL CROSS SECTION

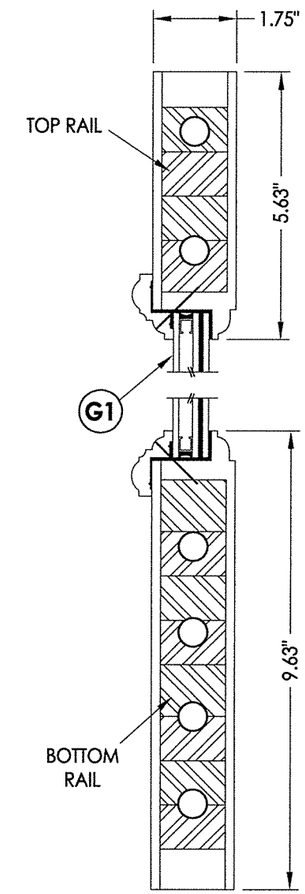

4/2 VERTICAL CROSS SECTION

WOOD DOOR COMPONENTS:
VENEER/EDGES: CYPRESS (G = 0.42)
ENGINEERED STAVE CORE: SIPO (UTILE) (G = 0.53)

L. F. SCHMIDT
LICENSE
No. 43409
STATE OF FLORIDA
PROFESSIONAL ENGINEER

4-11-17

Documents Prepared By:
Lyndon F. Schmidt
P.E. No. 43409

R.W. BUILDING CONSULTANTS, INC.
P.O. Box 230, Valrico, FL 33595
Phone No.: 813.659.9197
FBPE C.A. No. 9813

PRODUCT: MILLWORK 360 WOOD DOOR

PART OR ASSEMBLY: DOOR PANEL DETAILS

NO.	DATE	REVISIONS	BY

DATE: 02/14/17
SCALE: N.T.S.
DWG. BY: JK
CHK. BY: LFS
DRAWING NO.: FL-21891.2
SHEET 2 OF 12

© 2017 R.W. BUILDING CONSULTANTS INC.

R:\Clients\Millwork 360\A - Florida Product Approvals\FL-21891 Wood Doors\C - Drawings\FL-21891 (2014)\FL-21891.1-3.dwg, 2.2

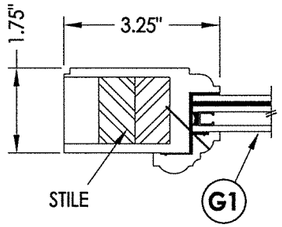

1/3 HORIZONTAL CROSS SECTION

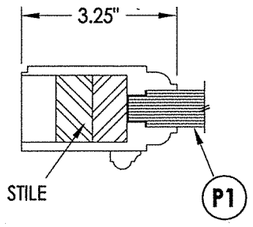

2/3 HORIZONTAL CROSS SECTION

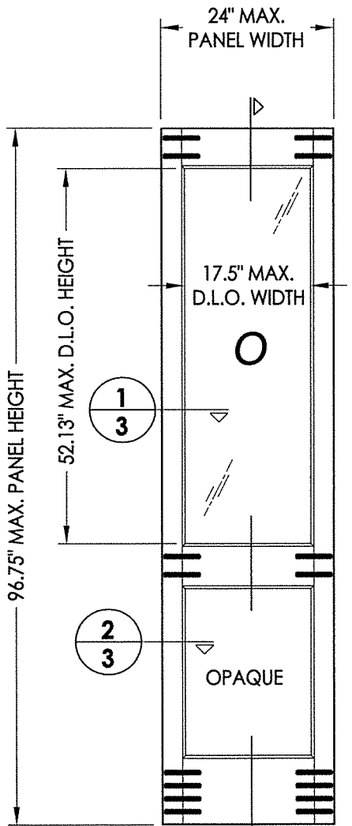

3/4 LITE

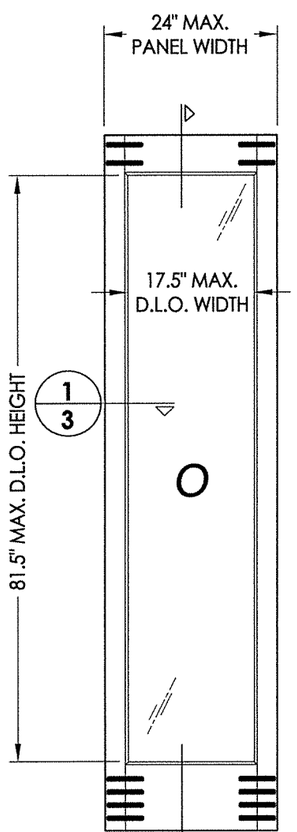

FULL LITE

50 WOOD SIDELITE PANEL

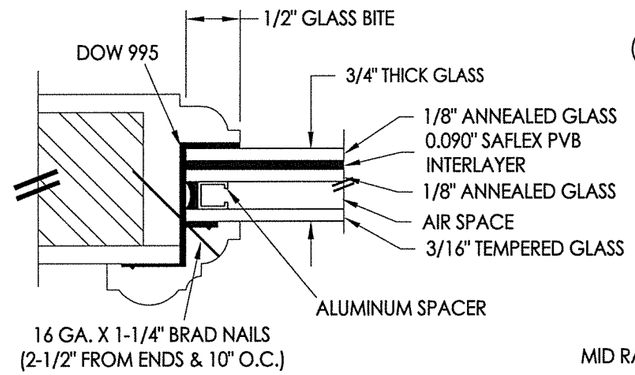

G1 GLAZING DETAIL

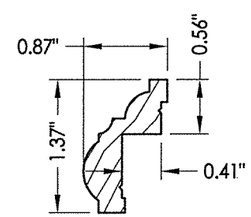

GLAZING BEAD

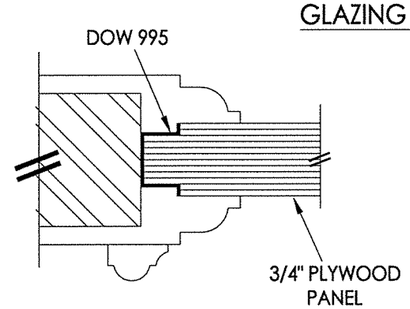

P1 PANEL INFIL DETAIL

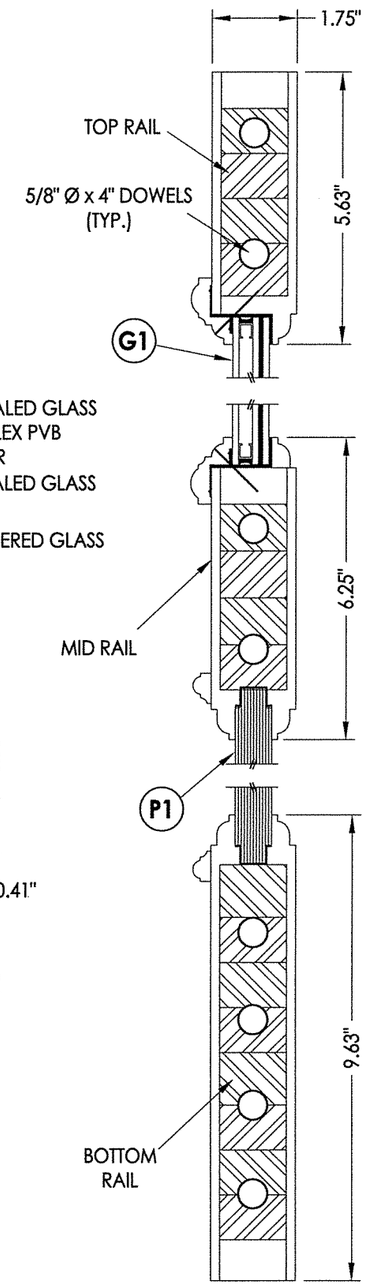

3/3 VERTICAL CROSS SECTION

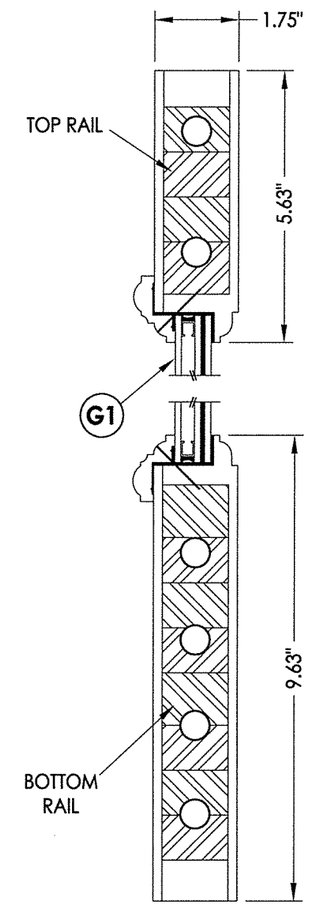

4/3 VERTICAL CROSS SECTION

WOOD SIDELITE COMPONENTS:
VENEER/EDGES: CYPRESS (G = 0.42)
ENGINEERED STAVE CORE: SIPO (UTILE) (G = 0.53)

L.F. SCHMIDT LICENSE No. 43409 STATE OF FLORIDA PROFESSIONAL ENGINEER

Documents Prepared By:
Lyndon F. Schmidt
P.E. No. 43409

R.W. BUILDING CONSULTANTS, INC.
P.O. Box 230, Valrico, FL 33595
Phone No.: 813.659.9197
FBPE C.A. No. 9813

PRODUCT: MILLWORK 360 WOOD DOOR

PART OR ASSEMBLY: SIDELITE PANEL DETAILS

NO.	DATE	REVISIONS	BY

DATE: 02/14/17
SCALE: N.T.S.
DWG. BY: JK
CHK. BY: LFS
DRAWING NO.: FL-21891.2
SHEET 3 OF 12

© 2017 R.W. BUILDING CONSULTANTS INC.

R:\Clients\Millwork 360\A - Florida Product Approvals\FL-21891 Wood Doors\C - Drawings\FL-21891 (2014)\FL-21891.1-3.dwg, 3.2

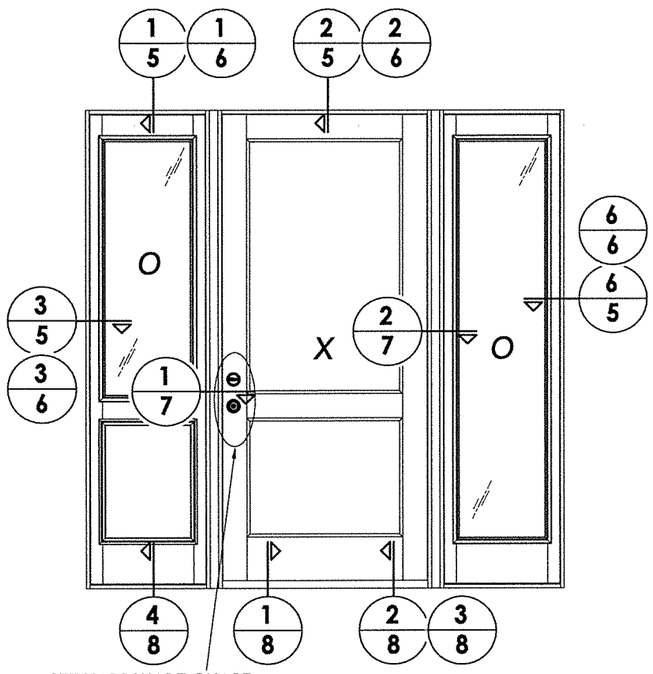

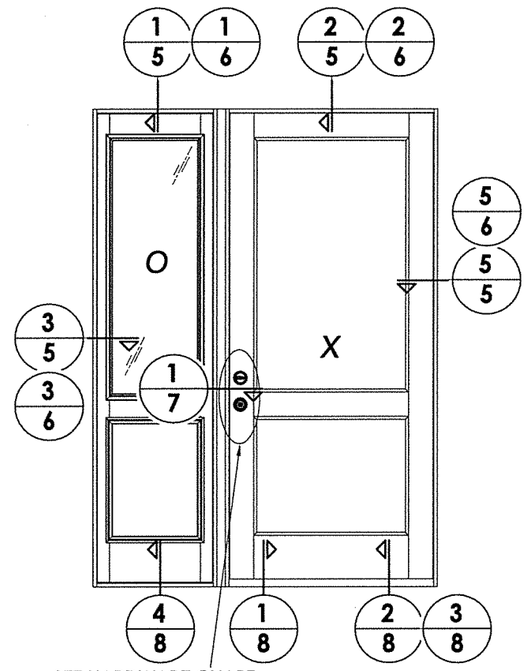

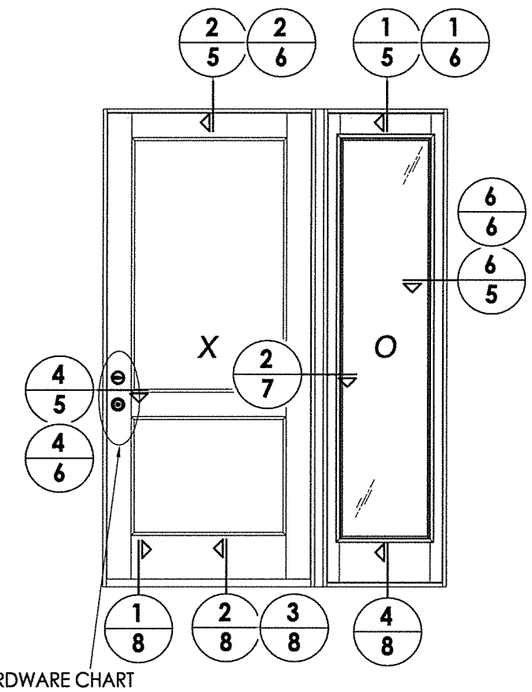

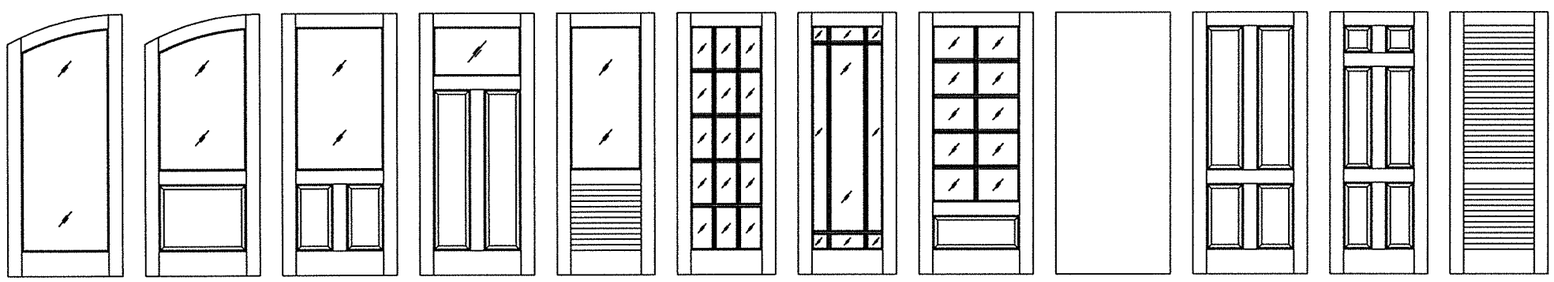

Millwork 360 Door Panel Options

Panel options shown are for illustration and are representative only.
Surface applied muntins are used for simulated divided lites shown.

HARDWARE TABLE	
MANUFACTURER	**MODEL**
EMTEK	Mortise: 3545 Entry Set
SCHLAGE	KNOB: F51 DEADBOLT: B60N
KWIKSET	KNOB: SIGNATURE SERIES DEADBOLT: SIGNATURE SERIES (980)

L. F. SCHMIDT
LICENSE
No. 43409
STATE OF FLORIDA
PROFESSIONAL ENGINEER

Documents Prepared/By:
Lyndon F. Schmidt
P.E. No. 43409

RW BUILDING CONSULTANTS, INC.
P.O. Box 230, Valrico, FL 33595
Phone No.: 813.659.9197
FBPE C.A. No. 9813

PRODUCT: MILLWORK 360 WOOD DOOR

PART OR ASSEMBLY: ELEVATIONS

NO.	DATE	REVISIONS	BY

DATE: 02/14/17
SCALE: N.T.S.
DWG. BY: JK
CHK. BY: LFS
DRAWING NO.: FL-21891.2
SHEET 4 OF 12

R:\Clients\Millwork 360\A - Florida Product Approvals\FL-21891 Wood Doors\C - Drawings\FL-21891 (2014)\FL-21891.1-3.dwg, 4.2

NOTE:
1. Item #22 located 4" from each end then 7 more (9 total).
2. Item #22 located 6" from each end (2 total).

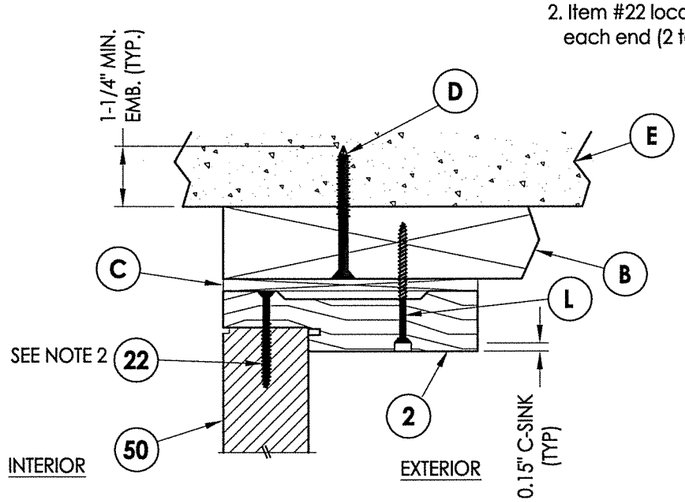

1/5 **VERTICAL CROSS SECTION**
Shown w/ 2X Buck
Inswing shown (Outswing similar)

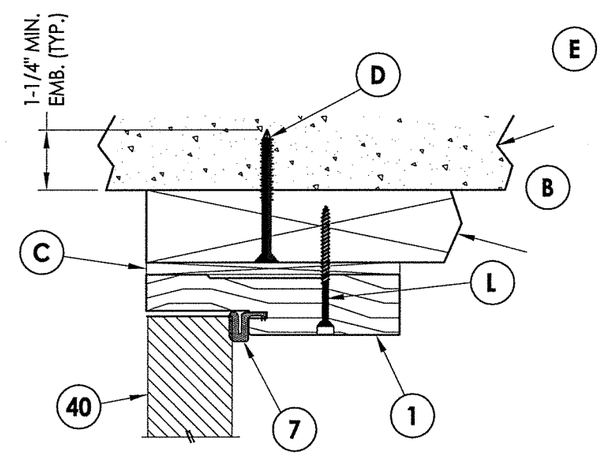

2/5 **VERTICAL CROSS SECTION**
Shown w/ 2X Buck
Inswing shown (Outswing similar)

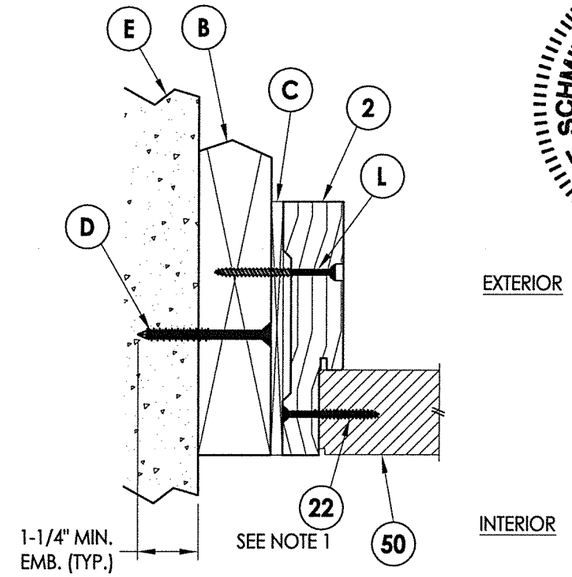

3/5 **HORIZONTAL CROSS SECTION**
Shown w/ 2X Buck
Inswing shown (Outswing similar)

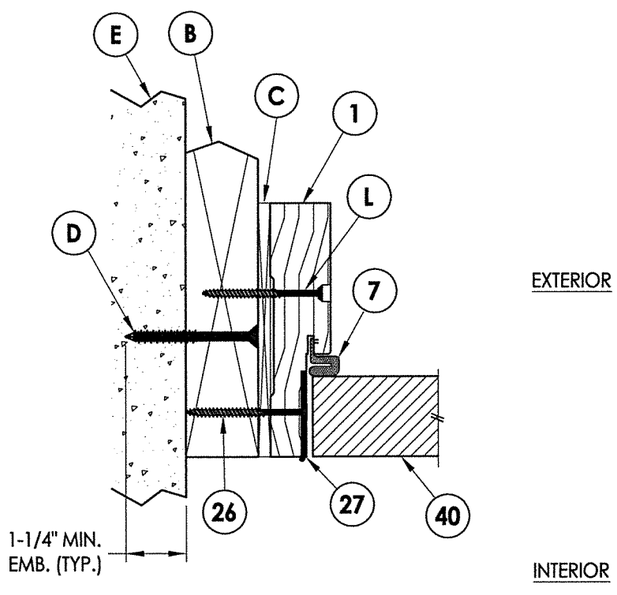

4/5 **HORIZONTAL CROSS SECTION**
Shown w/ 2X Buck
Inswing shown (Outswing similar)

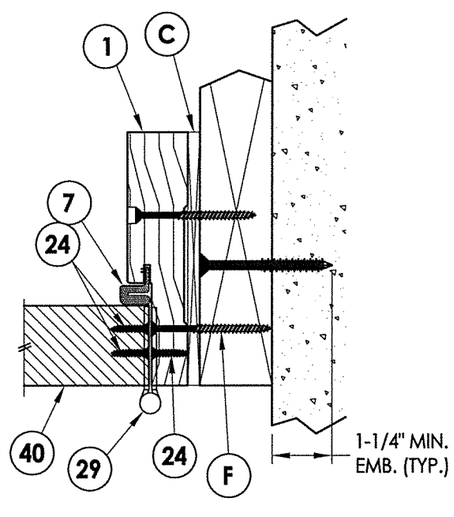

5/5 **HORIZONTAL CROSS SECTION**
Shown w/ 2X Buck
Inswing shown (Outswing similar)

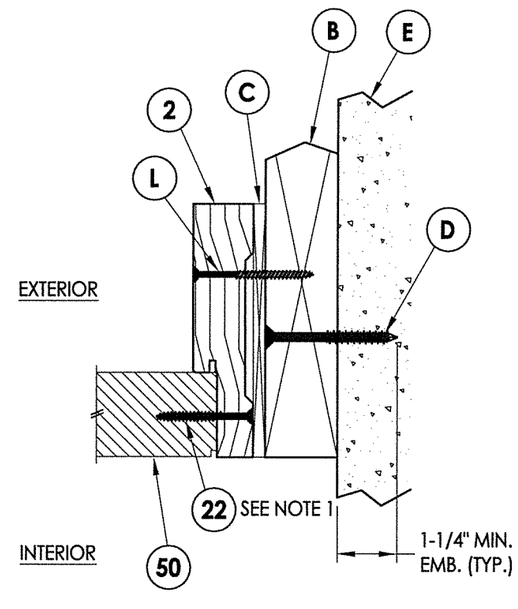

6/5 **HORIZONTAL CROSS SECTION**
Shown w/ 2X Buck
Inswing shown (Outswing similar)

L. F. SCHMIDT LICENSE No. 43409 STATE OF FLORIDA PROFESSIONAL ENGINEER

Documents Prepared By:
Lyndon F. Schmidt
P.E. No. 43409

RW BUILDING CONSULTANTS, INC.
P.O. Box 230, Valrico, FL 33595
Phone No.: 813.659.9197
FBPE C.A. No. 9813

PRODUCT: MILLWORK 360 WOOD DOOR

PART OR ASSEMBLY: HORIZONTAL & VERTICAL CROSS SECTIONS (2X BUCK)

NO.	DATE	REVISIONS	BY

DATE: 02/14/17
SCALE: N.T.S.
DWG. BY: JK
CHK. BY: LFS
DRAWING NO.: FL-21891.2
SHEET 5 OF 12

R:\Clients\Millwork 360\A - Florida Product Approvals\FL-21891 Wood Doors\C - Drawings\FL-21891 (2014)\FL-21891.1-3.dwg, 5.2

NOTE:
1. Item #22 located 4" from each end then 7 more (9 total).
2. Item #22 located 6" from each end (2 total).

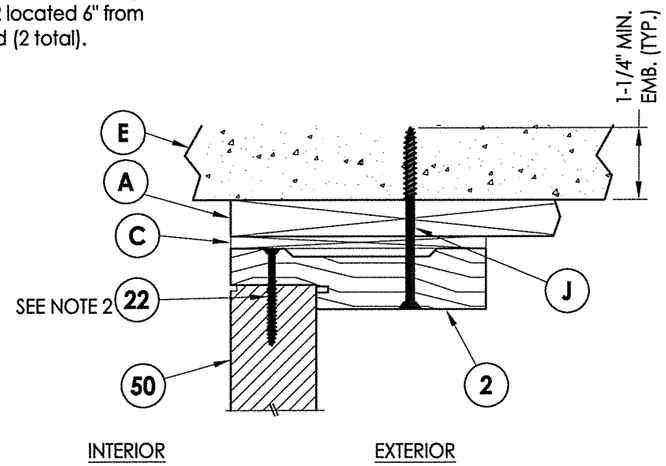

1/6 VERTICAL CROSS SECTION
Shown w/ 1X Buck
Inswing shown (Outswing similar)

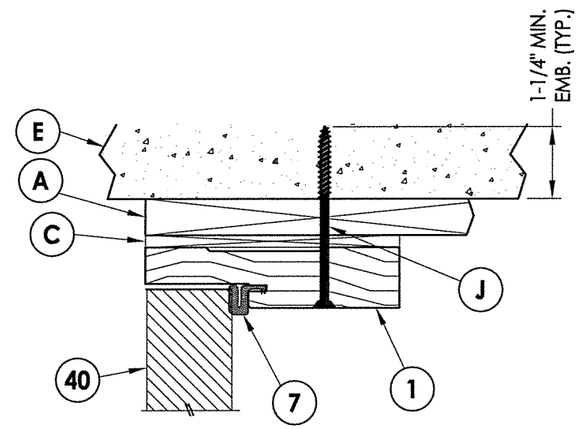

2/6 VERTICAL CROSS SECTION
Shown w/ 1X Buck
Inswing shown (Outswing similar)

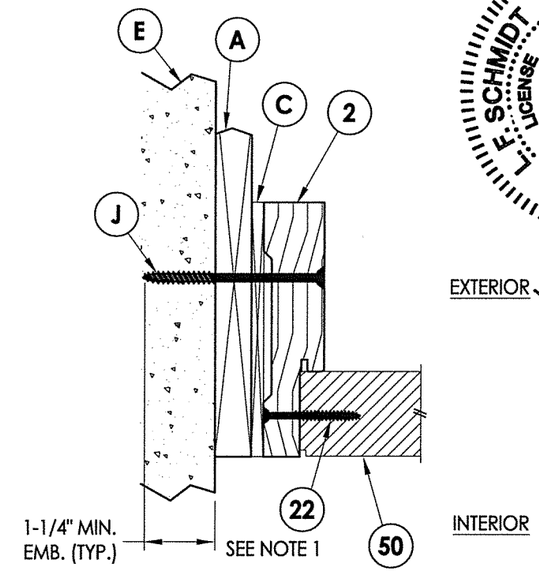

3/6 HORIZONTAL CROSS SECTION
Shown w/ 1X Buck
Inswing shown (Outswing similar)

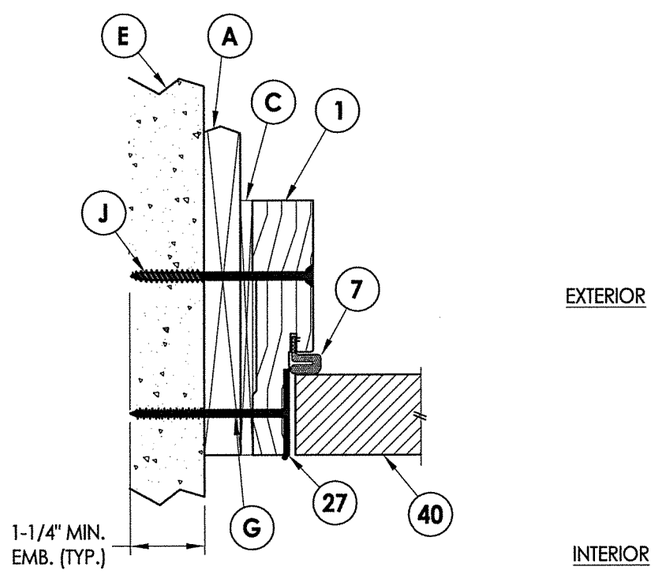

4/6 HORIZONTAL CROSS SECTION
Shown w/ 1X Buck
Inswing shown (Outswing similar)

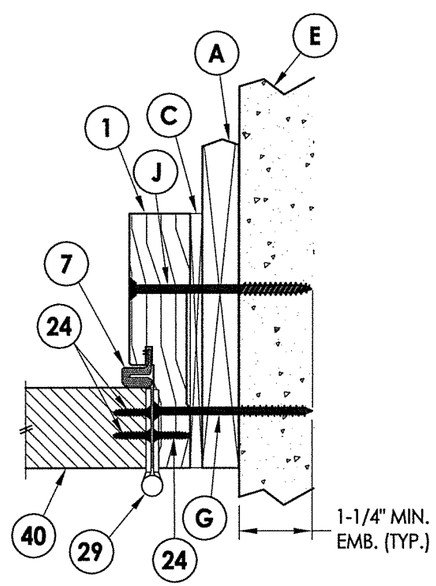

5/6 HORIZONTAL CROSS SECTION
Shown w/ 1X Buck
Inswing shown (Outswing similar)

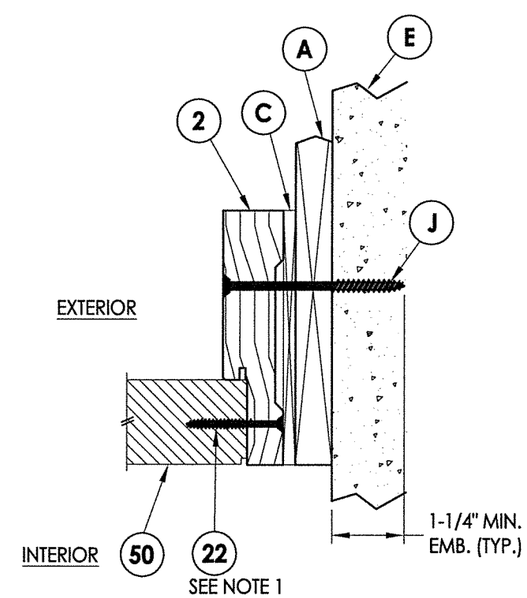

6/6 HORIZONTAL CROSS SECTION
Shown w/ 1X Buck
Inswing shown (Outswing similar)

L. F. SCHMIDT LICENSE No. 43409 STATE OF FLORIDA PROFESSIONAL ENGINEER

Documents Prepared By:
Lyndon F. Schmidt
P.E. No. 43409
RGW BUILDING CONSULTANTS, INC.
P.O. Box 230, Valrico, FL 33595
Phone No.: 813.659.9197
FBPE C.A. No. 9813

PRODUCT: MILLWORK 360 WOOD DOOR

PART OR ASSEMBLY: HORIZONTAL & VERTICAL CROSS SECTIONS (1X BUCK)

NO.	DATE	REVISIONS	BY

DATE: 02/14/17
SCALE: N.T.S.
DWG. BY: JK
CHK. BY: LFS
DRAWING NO.: FL-21891.2
SHEET 6 OF 12

R:\Clients\Millwork 360\A - Florida Product Approvals\FL-21891 Wood Doors\C - Drawings\FL-21891 (2014)\FL-21891.1-3.dwg, 6.2

NOTE:
1. Item #22 located 4" from each end then 7 more (9 total).

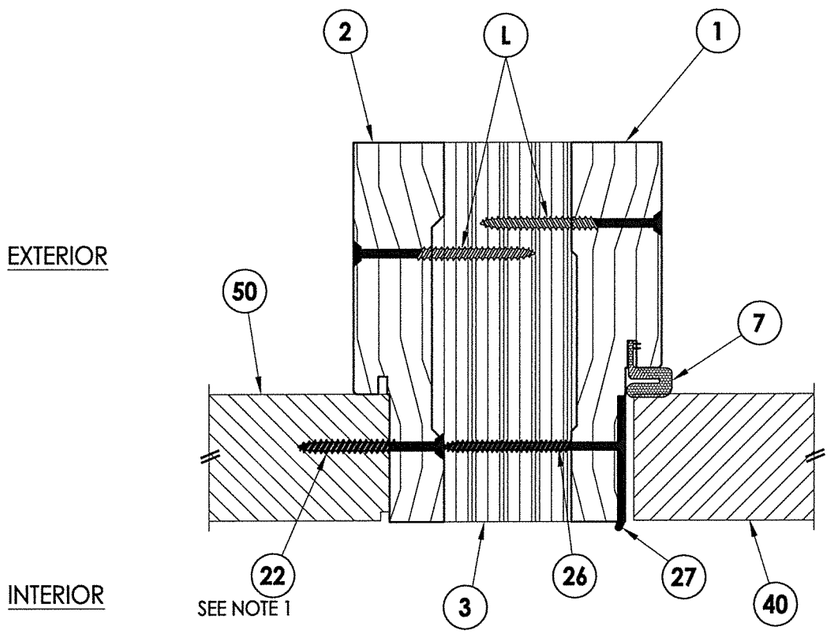

1/7 **HORIZONTAL CROSS SECTION**
Inswing shown (Outswing similar)

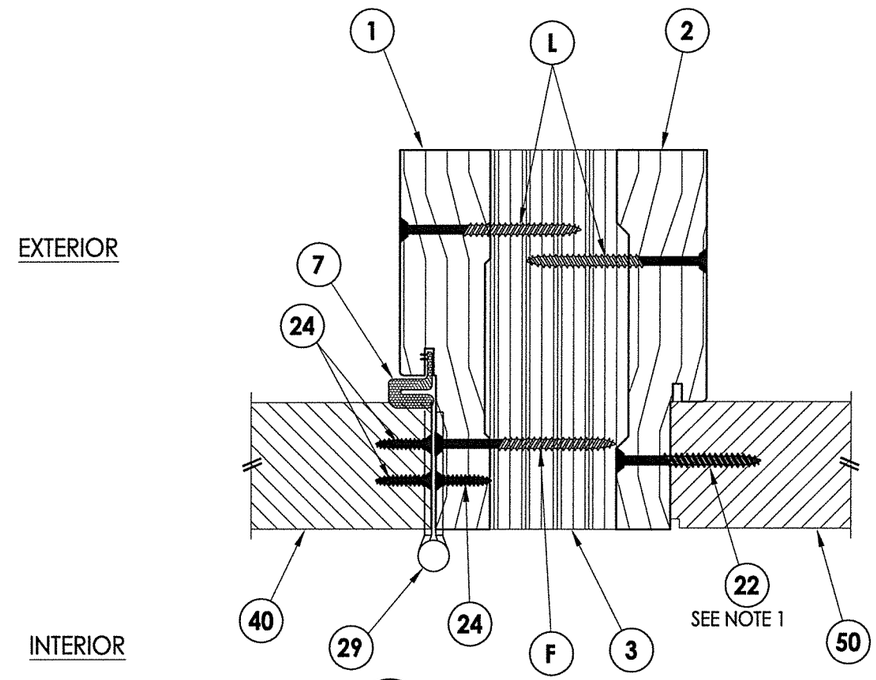

2/7 **HORIZONTAL CROSS SECTION**
Inswing shown (Outswing similar)

L. F. SCHMIDT
LICENSE
No. 43409
STATE OF FLORIDA
PROFESSIONAL ENGINEER

4.11.17

Documents Prepared By:
Lyndon F. Schmidt
P.E. No. 43409

RW BUILDING CONSULTANTS, INC.
P.O. Box 230, Valrico, FL 33595
Phone No.: 813.659.9197
FBPE C.A. No. 9813

PRODUCT: MILLWORK 360 WOOD DOOR

PART OR ASSEMBLY: HORIZONTAL CROSS SECTIONS

NO.	DATE	REVISIONS	BY

DATE: 02/14/17
SCALE: N.T.S.
DWG. BY: JK
CHK. BY: LFS
DRAWING NO.: FL-21891.2
SHEET 7 OF 12

R:\Clients\Millwork 360\A - Florida Product Approvals\FL-21891 Wood Doors\C - Drawings\FL-21891 (2014)\FL-21891.1-3.dwg, 7.2

NOTE:
1. Item #22 located 6" from each end (2 total).

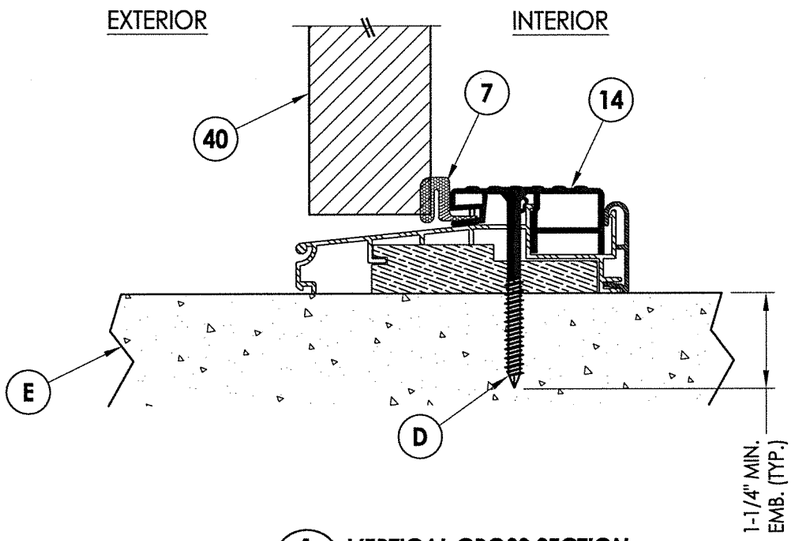

1/8 **VERTICAL CROSS SECTION**
Outswing

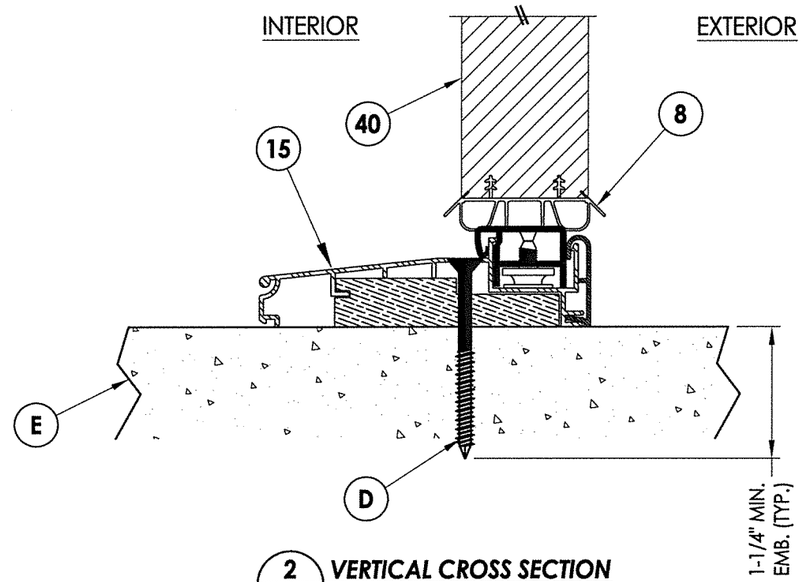

2/8 **VERTICAL CROSS SECTION**
Inswing

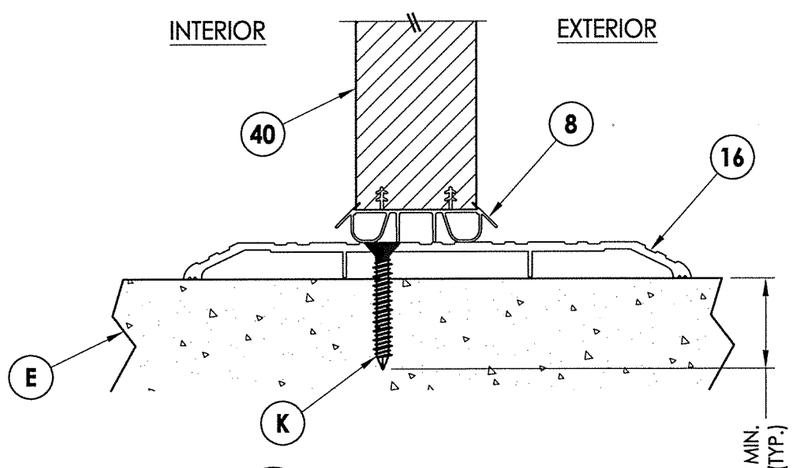

3/8 **VERTICAL CROSS SECTION**
Inswing shown (Outswing similar)

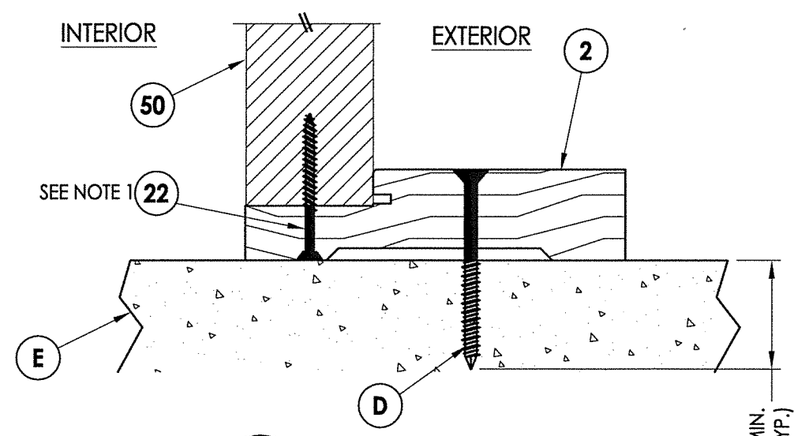

4/8 **VERTICAL CROSS SECTION**
Inswing shown (Outswing similar)

L. F. SCHMIDT LICENSE No. 43409 STATE OF FLORIDA PROFESSIONAL ENGINEER

Documents Prepared By:
Lyndon F. Schmidt
P.E. No. 43409

RGW BUILDING CONSULTANTS, INC.
P.O. Box 230, Valrico, FL 33595
Phone No.: 813.659.9197
FBPE C.A. No. 9813

PRODUCT: MILLWORK 360 WOOD DOOR

PART OR ASSEMBLY: VERTICAL CROSS SECTIONS (THRESHOLD)

NO.	DATE	BY

REVISIONS

DATE: 02/14/17
SCALE: N.T.S.
DWG. BY: JK
CHK. BY: LFS
DRAWING NO.: FL-21891.2
SHEET 8 OF 12

R:\Clients\Millwork 360\A - Florida Product Approvals\FL-21891 Wood Doors\C - Drawings\FL-21891 (2014)\FL-21891.1-3.dwg, 8.2

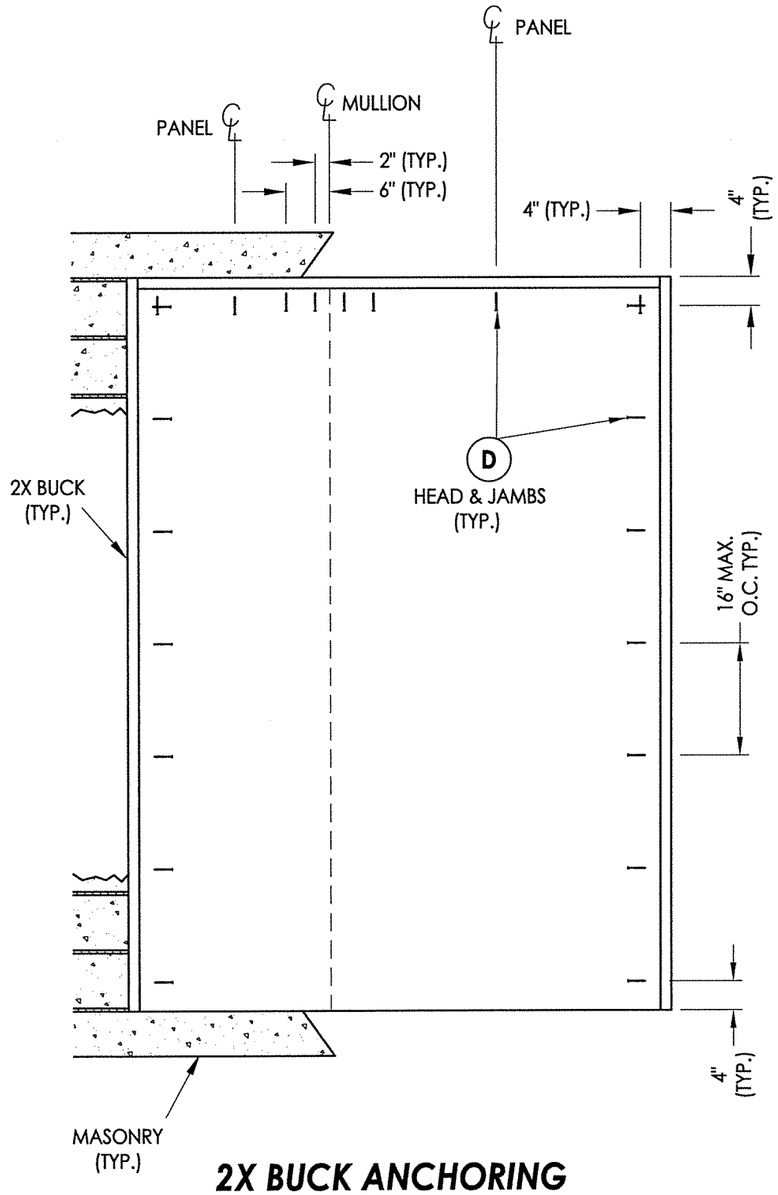

2X BUCK ANCHORING

OX Shown (XO - Similar)

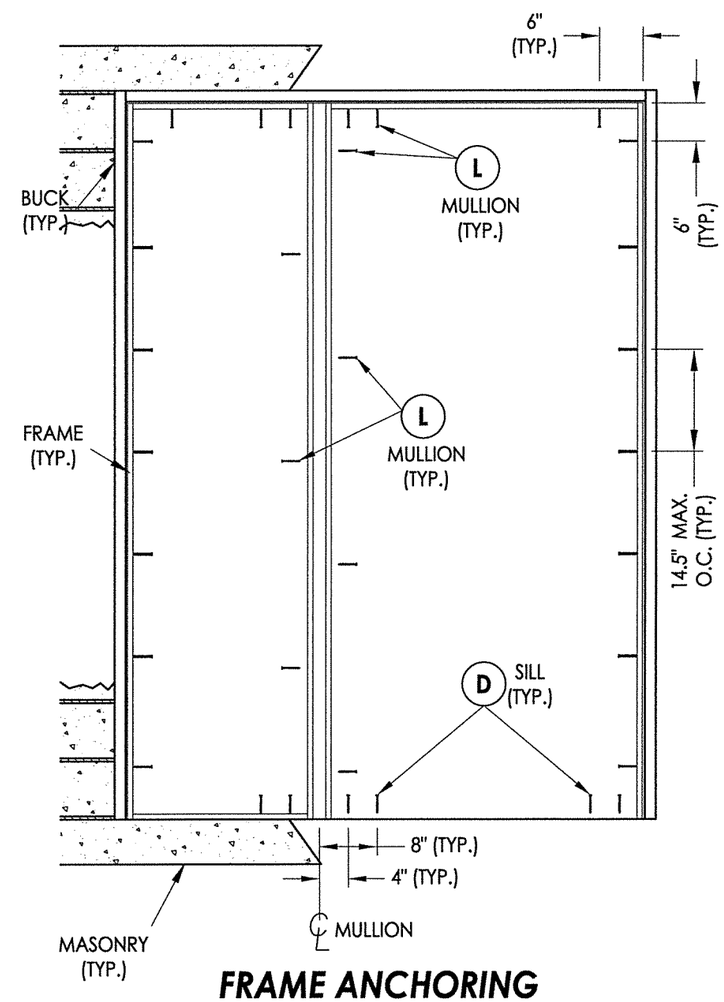

FRAME ANCHORING

OX Shown (XO - Similar)

NOTE:
1. ALL FRAME CORNERS SECURED WITH (3) #8 X 2-1/2" FH DEEP THREAD WOOD SCREWS @ SILL.

L. F. SCHMIDT LICENSE No. 43409 STATE OF FLORIDA PROFESSIONAL ENGINEER

4-11-17

Documents Prepared By:
Lyndon F. Schmidt
P.E. No. 43409

RW BUILDING CONSULTANTS, INC.
P.O. Box 230, Valrico, FL 33595
Phone No.: 813.659.9197
FBPE C.A. No. 9813

PRODUCT: MILLWORK 360 WOOD DOOR

PART OR ASSEMBLY: BUCK & FRAME ANCHORING (OX)

NO.	DATE	REVISIONS	BY

DATE: 02/14/17
SCALE: N.T.S.
DWG. BY: JK
CHK. BY: LFS
DRAWING NO.: FL-21891.2
SHEET 9 OF 12

© 2017 R.W. BUILDING CONSULTANTS INC.

R:\Clients\Millwork 360\A - Florida Product Approvals\FL-21891 Wood Doors\C - Drawings\FL-21891 (2014)\FL-21891.1-3.dwg, 9.2

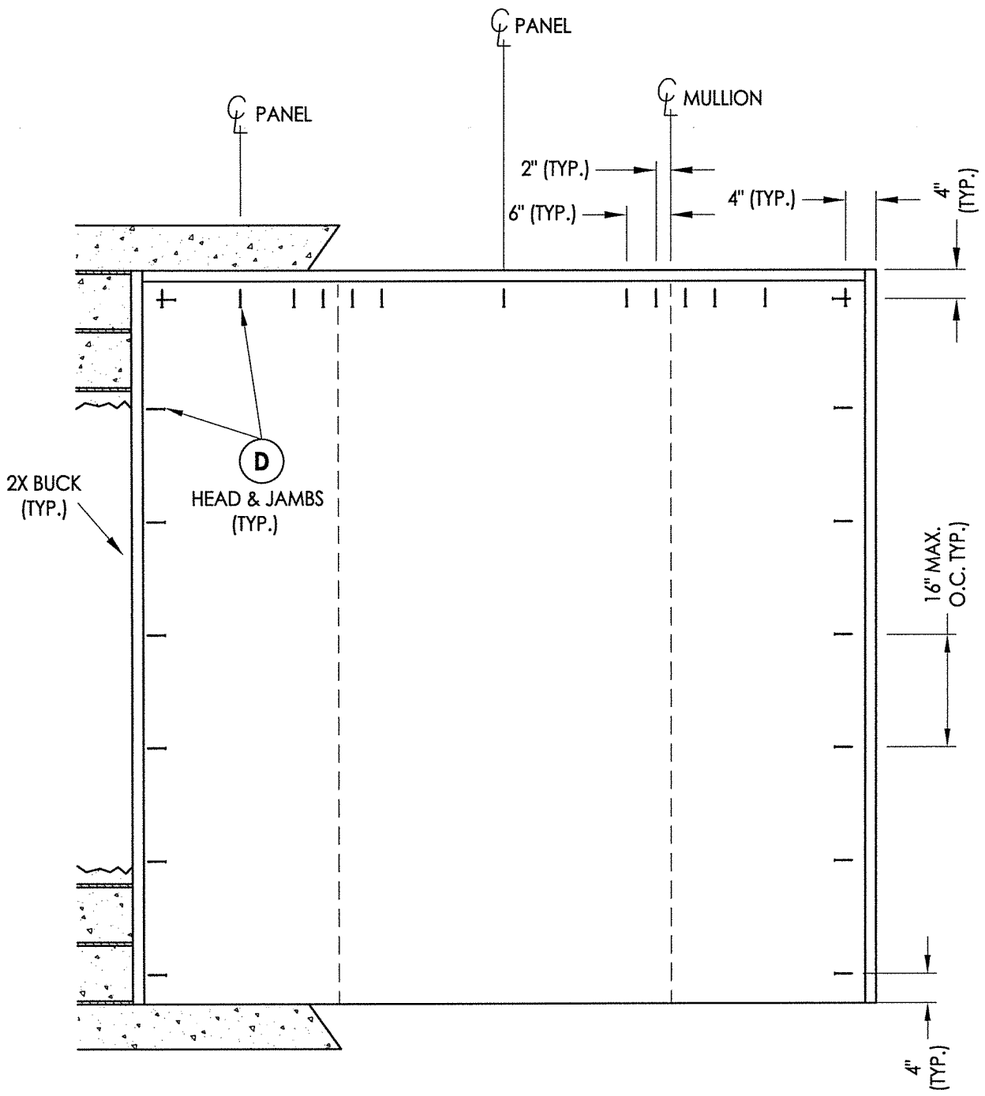

2X BUCK ANCHORING

OXO

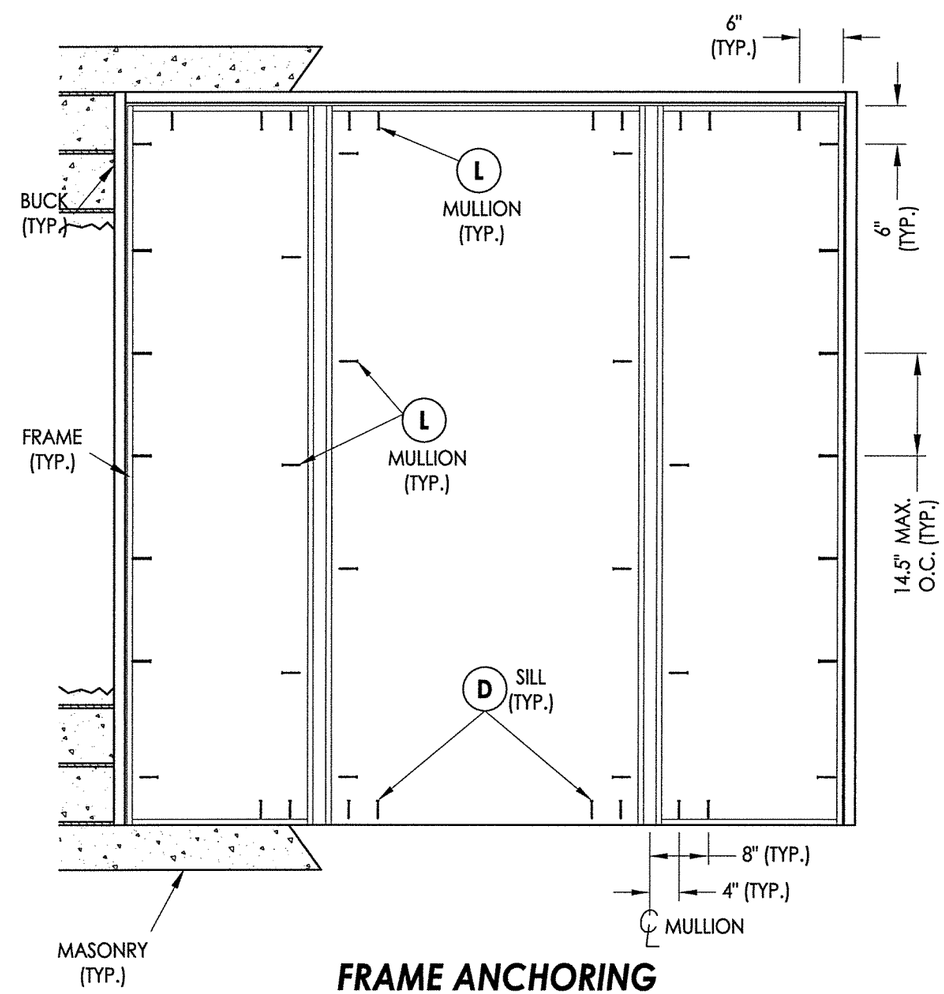

FRAME ANCHORING

OXO

NOTE:
1. ALL FRAME CORNERS SECURED WITH (3) #8 X 2-1/2" FH DEEP THREAD WOOD SCREWS @ SILL.

L. F. SCHMIDT LICENSE No. 43409 STATE OF FLORIDA PROFESSIONAL ENGINEER

Documents Prepared By:
Lyndon F. Schmidt
P.E. No. 43409

RW BUILDING CONSULTANTS, INC.
P.O. Box 230, Valrico, FL 33595
Phone No.: 813.659.9197
FBPE C.A. No. 9813

PRODUCT: MILLWORK 360 WOOD DOOR

PART OR ASSEMBLY: BUCK & FRAME ANCHORING (OXO)

NO.	DATE	REVISIONS	BY

DATE: 02/14/17
SCALE: N.T.S.
DWG. BY: JK
CHK. BY: LFS
DRAWING NO.: FL-21891.2
SHEET 10 OF 12

© 2017 R.W. BUILDING CONSULTANTS INC.

R:\Clients\Millwork 360\A - Florida Product Approvals\FL-21891 Wood Doors\C - Drawings\FL-21891 (2014)\FL-21891.1-3.dwg, 10.2

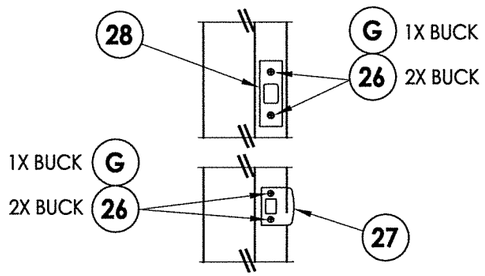

LATCH & DEADBOLT STRIKE DETAIL
SCHLAGE

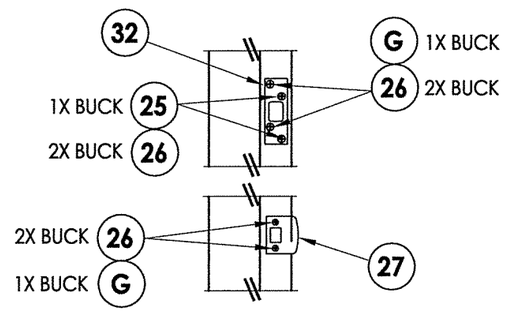

LATCH & DEADBOLT STRIKE DETAIL
KWIKSET

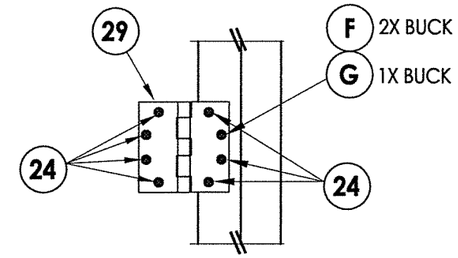

HINGE DETAIL

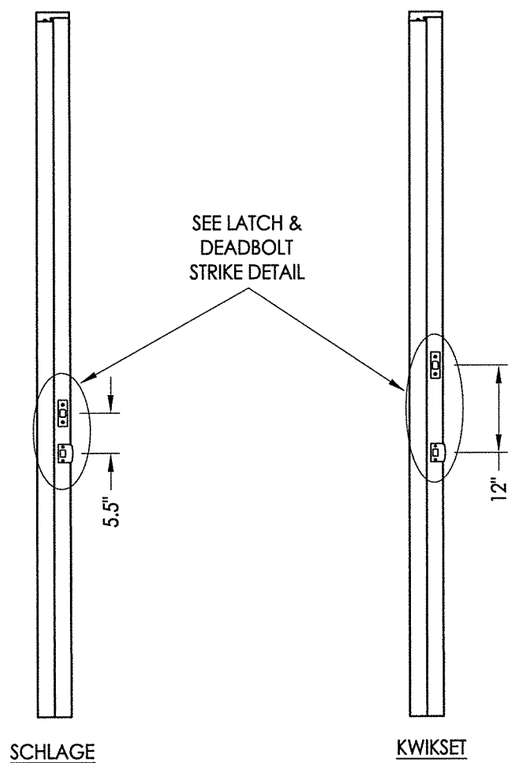

LATCH & DEADBOLT DETAILS

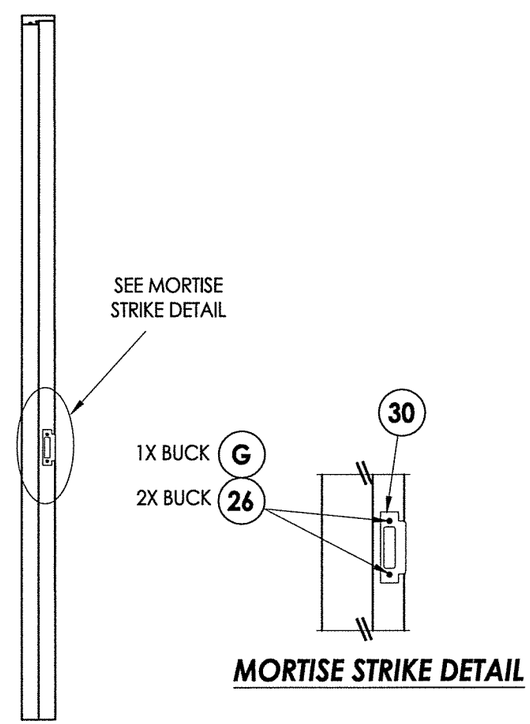

MORTISE STRIKE DETAIL

MORTISE LOCK DETAILS

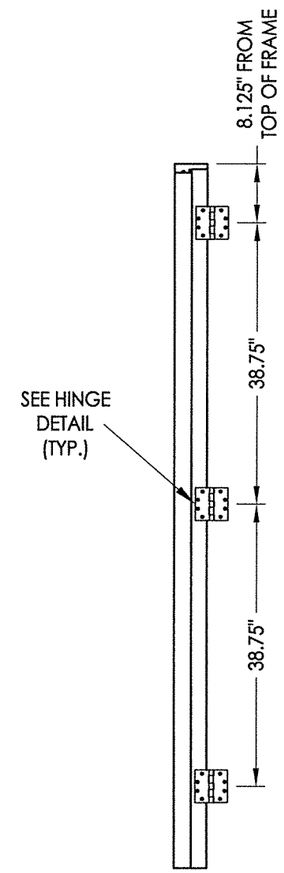

HINGE JAMB

L. F. SCHMIDT
LICENSE
No. 43409
STATE OF FLORIDA
PROFESSIONAL ENGINEER

Documents Prepared By:
Lyndon F. Schmidt
P.E. No. 43409

RW BUILDING CONSULTANTS, INC.
P.O. Box 230, Valrico, FL 33595
Phone No.: 813.659.9197
FBPE C.A. No. 9813

PRODUCT: MILLWORK 360 WOOD DOOR

PART OR ASSEMBLY: HARDWARE DETAILS

NO.	DATE	REVISIONS	BY

DATE: 02/14/17
SCALE: N.T.S.
DWG. BY: JK
CHK. BY: LFS
DRAWING NO.: FL-21891.2
SHEET 11 OF 12

© 2017 R.W. BUILDING CONSULTANTS INC.

R:\Clients\Millwork 360\A - Florida Product Approvals\FL-21891 Wood Doors\C - Drawings\FL-21891 (2014)\FL-21891.1-3.dwg, 11.2

BILL OF MATERIALS

ITEM #	DESCRIPTION	MATERIAL
A	1X BUCK (SG >= 0.42)	WOOD
B	2X BUCK (SG >= 0.42)	WOOD
C	1/4" MAX. SHIM SPACE	-
D	1/4" X 2-3/4" PFH ELCO OR ITW CONCRETE SCREW	STEEL
E	MASONRY - 3,000 PSI MIN. CONCRETE CONFORMING TO ACI 301 OR HOLLOW BLOCK CONFORMING TO ASTM C90	CONCRETE
F	#12 X 2-1/2" PFH WOOD SCREW	STEEL
G	3/16" X 3-1/4" PFH ITW CONCRETE SCREW	STEEL
J	1/4" X 3-3/4" PFH ELCO OR ITW CONCRETE SCREW	STEEL
L	#10 X 2-1/2" PFH WOOD SCREW (1.15" MIN. EMBEDMENT)	STEEL
K	1/4" X 1-3/4" PFH ELCO OR ITW CONCRETE SCREW	STEEL
1	JAMB (Door)	WOOD
2	JAMB (Sidelite)	WOOD
3	MULLION	LSL
7	WEATHERSTRIP	FOAM
8	SWEEP	VINYL
14	OUTSWING THRESHOLD	ALUM/COMP
15	INSWING THRESHOLD	ALUM/COMP
16	ADA THRESHOLD	ALUM
22	#10 X 2" PFH WOOD SCREW	STEEL
24	#12 x 1" PFH WOOD SCREW	STEEL
25	#8 x 1-3/4 PFH WOOD SCREW	STEEL
26	#8 x 2-1/2" PFH WOOD SCREW	STEEL
27	LATCH STRIKE PLATE	STEEL
28	DEADBOLT STRIKE PLATE	STEEL
29	4.5" X 4.5" HINGE	STEEL
30	MORTISE STRIKE PLATE	STEEL
32	DEADBOLT SECURITY STRIKE PLATE	STEEL
40	DOOR PANEL	-
50	SIDELITE PANEL	-
70	TRANSOM PANEL	-

WOOD FRAME COMPONENTS: SIPO (UTILE) (G = 0.53)

CONCRETE ANCHOR NOTES:

1. *Concrete anchor locations at the corners may be adjusted to maintain the min. edge distance to mortar joints.*
2. *Concrete anchor locations noted as "MAX. ON CENTER" must be adjusted to maintain the min. edge distance to mortar joints, additional concrete anchors may be required to ensure the "MAX. ON CENTER" dimension are not exceeded.*
3. *Concrete anchor table:*

ANCHOR TYPE	ANCHOR SIZE	MIN. EMBEDMENT	MIN. CLEARANCE TO MASONRY EDGE	MIN. CLEARANCE TO ADJACENT ANCHOR
ITW TAPCON®	1/4"	1-1/4"	2"	4"
ELCO ULTRACON®	1/4"	1-1/4"	1"	4"
ITW TAPCON®	3/16"	1-1/4"	3"	1-1/2"

WOOD SCREW INSTALLATION NOTES:

1. *Maintain a minimum 5/8" edge distance, 1" end distance, & 1" o.c. spacing of wood screws to prevent the splitting of wood.*

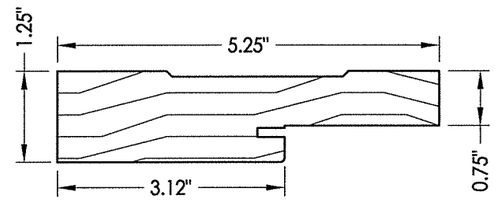

1 **WOOD JAMB** (Door)

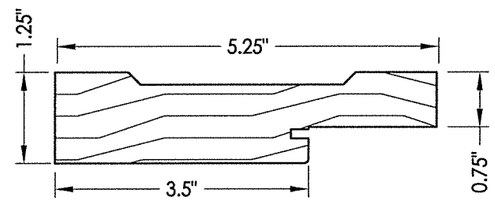

2 **WOOD JAMB** (Sidelite)

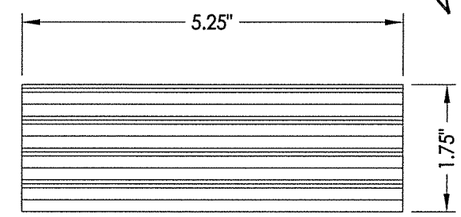

3 **MULLION** VERSA-LAM® 3100 Fb-2.0E

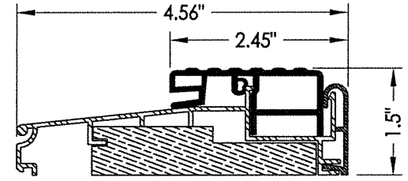

14 **OUTSWING THRESHOLD** WORLDWIDE

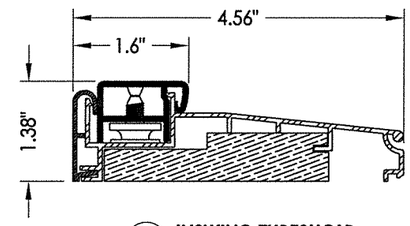

15 **INSWING THRESHOLD** WORLDWIDE

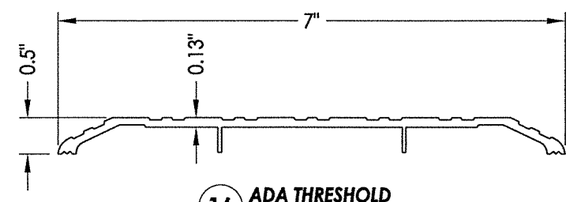

16 **ADA THRESHOLD**

STATE OF FLORIDA PROFESSIONAL ENGINEER LYNDON F. SCHMIDT LICENSE No. 43409

Y-11-17

Documents Prepared By:
Lyndon F. Schmidt
P.E. No. 43409

RW BUILDING CONSULTANTS, INC.
P.O. Box 230, Valrico, FL 33595
Phone No.: 813.659.9197
FBPE C.A. No. 9813

PRODUCT: MILLWORK 360 WOOD DOOR

PART OR ASSEMBLY: BILL OF MATERIALS & COMPONENTS

NO.	DATE	REVISIONS	BY

DATE: 02/14/17
SCALE: N.T.S.
DWG. BY: JK
CHK. BY: LFS
DRAWING NO.: FL-21891.2
SHEET 12 OF 12

© 2017 R.W. BUILDING CONSULTANTS INC.

R:\Clients\Millwork 360\A - Florida Product Approvals\FL-21891 Wood Doors\C - Drawings\FL-21891 (2014)\FL-21891.1-3.dwg, 12.2